Available online at www.sciencedirect.com

ScienceDirect

IFAC PapersOnLine 52-12 (2019) 91–96

Space Micro-launcher H_∞ Control Under Parametric Modeling Uncertainties ⋆

Sabin Diaconescu * **Andrei Sperilă** * **Bogdan D. Ciubotaru** * **Adrian M. Stoica** **

* *Automatic Control and Systems Engineering Department, University Politehnica of Bucharest (e-mail: {sabin.diaconescu, andrei.sperila, bogdan.ciubotaru}@acse.pub.ro)*
** *Aerospace Engineering Department, University Politehnica of Bucharest (e-mail: adrian.stoica@aero.pub.ro)*

Abstract: A continuous set of uncertain linear systems is derived from the space micro-launcher's time-varying nonlinear dynamics. The associated singular robust control problem is formulated. The resulting controller is further tuned and validated using a simulator, which implements the micro-launcher's full equations of motion.

Copyright © 2019. The Authors. Published by Elsevier Ltd. All rights reserved.

Keywords: H-infinity control, space micro-launcher, uncertain dynamic systems.

1. INTRODUCTION

Interest in employing micro-launchers for satellite orbital insertion has steadily increased over the last few years. Accordingly, ever more complex solutions are sought after, in order to compensate for the increased difficulty in properly controlling these launchers, due to significant variations in their physical parameters and structure.

Although the dynamics of this type of micro-launchers are inherently nonlinear, deriving sufficient, and, oftentimes, even necessary conditions for guaranteed robust performance across the entire flight trajectory may only be formulated through linear control theory. Therefore, the challenge is to synthesize linear controllers which manage to properly control the vehicle in spite of all the inherent uncertainty. To this end, ample and conservatively-bounded variations in the linearized models are deduced and the associated robust control problem is formulated in such a way as to exploit the resulting generalized plant's structure and particularities.

The application developed in this paper aims to prove that, through careful analysis of the target plant and sensible trade-off between closed-loop performance and robustness to model variation, the need for gain-scheduling may be minimized and only a single controller is necessary for the entire segment of atmospheric flight.

This paper is organized as follows. Section II describes the micro-launcher dynamics as well as the associated uncertainties. Section III contains controller synthesis procedure and its validation in the non-linear flight dynamics simulator.

⋆ The authors acknowledge the financial support from the European Space Agency through contract number 4000119953/17/F/JLVs, Advanced Control Techniques for Future Launchers.

2. MICRO-LAUNCHER DYNAMICS AND UNCERTAIN MODELS

2.1 Micro-launcher linear dynamics

Due to the considerable number of physical parameters which vary significantly during flight, the most sensible choice for the linearization criterion is the elapsed time from rocket take-off. Let N be the number of moments for which the micro-launcher's nonlinear dynamics are subject to linearization and k be the index which varies from 1 to N, denoting the ordinal number of the considered linear model.

The obtained models, $P_k(s)$, may be characterized by their state-space equations as follows

$$\begin{aligned} \dot{x} &= A_k^\Delta x + B_k^\Delta u, \;\; k = \overline{1:N}\,, \\ y &= \quad x\,, \end{aligned}$$

where the superscript $(\cdot)^\Delta$ indicates an uncertain matrix. Indeed, there are these very uncertainties that render the control both challenging and of particular interest.

The micro-launcher state-space longitudinal dynamics is described by

$$\begin{bmatrix} \dot{\theta} \\ \ddot{\theta} \\ \ddot{z} \end{bmatrix} = \begin{bmatrix} 0 & 1 & 0 \\ a_{\dot{\theta}}^{\theta} & 0 & a_{\dot{\theta}}^{\dot{z}} \\ a_{\dot{z}}^{\theta} & 0 & a_{\dot{z}}^{\dot{z}} \end{bmatrix} \begin{bmatrix} \theta \\ \dot{\theta} \\ \dot{z} \end{bmatrix} + \begin{bmatrix} 0 & 0 \\ b_{\theta}^{\delta} & a_{\dot{\theta}}^{\alpha_w} \\ b_{\dot{z}}^{\delta} & a_{\dot{z}}^{\alpha_w} \end{bmatrix} \begin{bmatrix} \delta \\ \alpha_w \end{bmatrix}, \tag{1}$$

where the states of the system are:

- θ – pitch angle [deg],
- $\dot{\theta}$ – pitch rate [deg/s],
- $\dot{z}$ – lateral drift speed [m/s],

while its inputs are:

- δ – TVC nozzle deflection [deg],
- α_w – wind incidence [deg],

where TVC stands for the Thrust Vector Control.

2405-8963 Copyright © 2019. The Authors. Published by Elsevier Ltd. All rights reserved.
Peer review under responsibility of International Federation of Automatic Control.
10.1016/j.ifacol.2019.11.075

The elements of the state and of the control matrices are build from:

- $H_0 = Q_0 SL$, $a_{\dot\theta}^{\theta} = H_0 \frac{C_{n_\alpha}}{C}$, $a_{\dot\theta}^{\dot z} = -a_{\dot\theta}^{\theta}\frac{1}{V}$, $F_0 = Q_0 S$,
- $a_{\dot z}^{\theta} = \frac{F_0}{m} C_{L_\alpha} + \frac{T}{m} cos(\alpha - \delta) - \frac{V^2}{R} sin(\gamma)$,
- $a_{\dot z}^{\dot z} = -\frac{F_0}{mV} C_{L_\alpha} - \frac{T}{mV} cos(\alpha - \delta) + \frac{g}{V} sin(\gamma)$,
- $b_{\dot\theta}^{\delta} = \frac{-Tl}{C} x cos(\delta)$, $a_{\dot\theta}^{\alpha_w} = -a_{\dot\theta}^{\theta}$,
- $b_{\dot z}^{\delta} = -\frac{T}{m} cos(\alpha - \delta)$,
- $a_{\dot z}^{\alpha_w} = -\frac{F_0}{m} C_{L_\alpha} - \frac{T}{m} cos(\alpha - \delta) + g sin(\gamma)$,

where F_0 and H_0 stand for the aerodynamic reference force and moment, and where $a_{\dot\theta}^{\theta}$, $a_{\dot\theta}^{\dot z}$, $a_{\dot z}^{\theta}$, $a_{\dot y}^{\dot z}$, $b_{\dot\theta}^{\delta}$, $a_{\dot\theta}^{\alpha_w}$, $b_{\dot z}^{\delta}$ and $a_{\dot z}^{\alpha_w}$ denote the stability and the control derivatives, respectively, for the longitudinal motion.

For the control problem considered in this paper, it is assumed that all the states are measurable. Additionally, α, the angle of attack, is computed by the following equation

$$\alpha = \theta + \frac{\dot z}{V_k} - \alpha_w, \tag{2}$$

where V_k is the estimated total airspeed at linearization time interval k; the angle of attack must be tightly bounded during flight to prevent structural damage due to air resistance.

2.2 Parametric uncertainties

The primary source of model uncertainty comes from a set of six physical time-varying parameters. Further complicating the situation is the fact that these variables interact with each other by way of nonlinear expressions. Where this is not the case, the resulting control problem can be solved through dedicated structured robust stabilization procedures such as μ-synthesis, which has been tailor-made for this exact class of problems. However, if one attempts to group all nonlinear expressions of the varying parameters into an expanded set of merged linear variables, then the number of independent stability criteria that must be satisfied greatly exceeds the span which may be tackled through such a procedure. Thus, a new approach is taken. Standard deviations are computed for all six uncertain parameters and they are subsequently bounded using the 3σ-limited normal distribution.

The standard deviations for the considered case are:

$$\sigma_A = \sqrt{3}\%, \quad \sigma_I = \sqrt{3}\%, \quad \sigma_m = \sqrt{2}\%,$$
$$\sigma_\ell = \sqrt{1}\%, \quad \sigma_T = \sqrt{1}\%,$$

where A stands for the aerodynamic coefficients, σ_I for the inertia coefficient, σ_m for the mass, σ_ℓ for the position of the thrust vector with respect to the center of mass, and σ_T for the thrust force.

This results in the following set of uncertain parameters:

$$\begin{aligned} C_{L_\alpha,k}^{\Delta} &= C_{L_\alpha,k}\left(1 \pm 3\cdot\sigma_A\right), \\ C_{n_\alpha,k}^{\Delta} &= C_{n_\alpha,k}\left(1 \pm 3\cdot\sigma_A\right), \\ C_k^{\Delta} &= C_k\left(1 \pm 3\cdot\sigma_I\right), \\ m_k^{\Delta} &= m_k\left(1 \pm 3\cdot\sigma_m\right), \\ \ell_k^{\Delta} &= \ell_k\left(1 \pm 3\cdot\sigma_x\right), \\ T_k^{\Delta} &= T_k\left(1 \pm 3\cdot\sigma_T\right), \end{aligned} \tag{3}$$

where $C_{L_\alpha,k}^{\Delta}$ stands for the lift coefficient derivative, $C_{n_\alpha,k}^{\Delta}$ for the coefficient of the normal aerodynamic force slope with respect to the incidence, C_k^{Δ} for the moment of inertia, m_k^{Δ} for the mass, ℓ_k^{Δ} for the distance between the center of mass and the aerodynamic center of pressure and T_k^{Δ} for the thrust.

This set is then used to construct the two matrices A_k^{Δ} and B_k^{Δ}, which make up the uncertain plant at any given linearization k-th time interval. The resulting guaranteed level of confidence of approximately 99.73%, coupled with the conservativeness of sufficient robust stability conditions, ensures that the resulting uncertain plant accurately captures all possible realizations of the original system. This uncertain plant is then sampled to produce a sufficient number of frequency responses (200 was determined to be an adequate sample size) in order to deduce an input-multiplicative frequency-based uncertainty weight. Furthermore, the procedure has been executed on a per-channel basis, so that the resulting weight's transfer matrix is diagonal and each ith element corresponds to the ith input channel's uncertainty. The reasoning for this is not immediately apparent, but shall be made clear during the description of the synthesis phase. As it regards the order of these uncertainty weights, it has been determined that second-order filters are sufficient in capturing the frequency envelopes which bound the level of uncertainty in the plant's amplitude diagrams. The manner in which this partition manifests itself in the plant's spectrum is illustrated in Fig. 1, where it is plan to see that each of the plant's columns presets its own uncertainty profile.

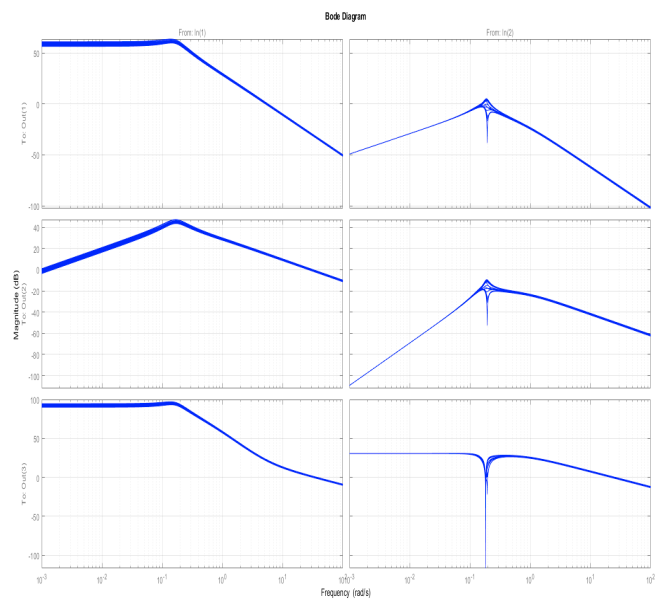

Fig. 1. Input-multiplicative uncertainty

2.3 Actuator approximation

In addition to the micro-launcher's model, which maps the vehicle's flight dynamics, it is also necessary to consider the TVC actuator itself, as it is the subsystem which is responsible for the application of the calculated thrust deflection ensures that the launcher stays on its prescribed trajectory. The nonlinear dynamics of this type of actuator are approximated, usually, through a second-order transfer function along with an input-transfer delay.

This ensemble is henceforth referred to as

$$G_{TVC}(s) = K_{TVC} \cdot \frac{\omega_{TVC}^2}{s^2 + 2\zeta_{TVC}\omega_{TVC}s + \omega_{TVC}^2} \cdot e^{-s\tau_{TVC}}. \tag{4}$$

The main trade-off in adopting this approximation is that the four parameters bearing the $(\cdot)_{TVC}$ subscript must be considered uncertain in order to fully capture the original, nonlinear element's frequency response. Their nominal values, along with variational bounds and units of measurement, are included in Tab. 1.

Table 1. Uncertain TVC model parameters

Parameter	Nominal value	Unit	Uncertainty
K_{TVC}	1.0	-	±20%
ω_{TVC}	120	rad/sec	±20%
ζ_{TVC}	0.7	-	±10%
τ_{TVC}	15	msec	±20%

This uncertainty, as it is the case with the one belonging to the micro-launcher dynamics, must be accurately mapped into a frequency weight and taken into account for the purposes of closed-loop robust stabilization. The same procedure as was previously discussed is employed in an identical manner. The input-transfer delay has also been approximated using a first-order Padé filter, in order to accommodate the weight-deducing procedure. Although the TVC model is a single-input single-output transfer function, the uncertainty weight which has been deduced for it is also explicitly taken as input-multiplicative.

3. CONTROLLER SYNTHESIS AND VALIDATION

3.1 H_∞ Control Procedure

Consider that the state-space dynamics of a generalized plant G is given by

$$\begin{aligned} \dot{x} &= Ax + B_1\mathbf{w} + B_2 u\,, \\ \mathbf{z} &= C_1 x + D_{11}\mathbf{w} + D_{12} u\,, \\ y &= C_2 x + D_{21}\mathbf{w} + D_{22} u\,, \end{aligned} \tag{5}$$

and G was adequately partitioned as

$$\begin{bmatrix} \mathbf{z} \\ y \end{bmatrix} = \begin{bmatrix} G_{11} & G_{12} \\ G_{21} & G_{22} \end{bmatrix} \begin{bmatrix} \mathbf{w} \\ u \end{bmatrix}\,, \tag{6}$$

where $\mathbf{z}$ stands for the error outputs, y for measurements outputs, u for control inputs and $\mathbf{w}$ for input disturbances.

The standard numerical solution of the H_∞ control problem involves two-Riccati equations and a loop shifting, presented in Glover and J.C.Doyle (1988), Doyle et al. (1989) and Safonov et al. (1989). The problem is solved by using a standard γ-iteration method, which involves a bisection algorithm, in order to determine the optimal value of the controller performance, γ.

In order for the problem to be solvable, the pairs (A, B_2) and (C_2, A) must be stabilizable and detectable, respectively. For this default algorithm, the plant is also restricted so that P_{12} and P_{21} must not have zeros on the imaginary axis. The algorithm works properly if D_{12} and D_{21} have full rank. Though, this is not the case here, because of the launcher dynamics. Consequently, a linear matrix inequalities (LMI) based method (see Packard et al. (1992), Gahinet and Apkarian (1994), Iwasaki and Skelton (1994)) must be used for solving the arising H_∞ problem in this case.

The H_∞ control problem can be solved by a purely algebraic approach. Existence conditions in terms of LMIs along with a parametrization of all H_∞ controllers can be found in Iwasaki and Skelton (1994). The following theorem from Gahinet and Apkarian (1994) gives a characterization of γ-sub-optimal controllers, for both regular and singular H_∞ problems. We firstly need some shorthand notations in order to simplify the formulas and the computations, specifically

$$\begin{aligned} \hat{B}_2 &= B_2 D_{12}^{+}\,, & \hat{A} &= A - \hat{B}_2 C_1\,, \\ \hat{B}_1 &= B_1 - \hat{B}_2 D_{11}\,, & \hat{C}_1 &= \left(I - D_{12}D_{12}^{+}\right) C_1\,, \\ \hat{D}_{11} &= \left(I - D_{12}D_{12}^{+}\right) D_{11}\,, & \tilde{C}_2 &= D_{21}^{+} C_2\,, \\ \tilde{A} &= A - B_1 \tilde{C}_2\,, & \tilde{C}_1 &= C_1 - D_{11}\tilde{C}_2\,, \\ \tilde{B}_1 &= B_1\left(I - D_{21}^{+}D_{21}\right)\,, & \tilde{D}_{11} &= D_{11}\left(I - D_{21}^{+}D_{21}\right)\,. \end{aligned} \tag{7}$$

Theorem 1. Gahinet and Apkarian (1994). Consider a proper plant G of order n and minimal realization, assume that (A, B_2, C_2) is stabilizable and detectable and $D_{22} = 0$, and let W_{12} and W_{21} denote bases of the null spaces of $\left(I - D_{12}D_{12}^{+}\right) B_2^T$ and $\left(I - D_{21}D_{21}^{+}\right) C_2$, respectively. Using the notations from (7), the sub-optimal H_∞ problem of parameter γ is solvable if and only if:

(a) $\gamma > \max\left(\sigma_{\max}(\hat{D}_{11})\,, \sigma_{\max}(\tilde{D}_{11})\right)$,

(b) there exists a pair of symmetric matrices (R, S) in $\mathbb{R}^{n\times n}$ such that

$$W_{12}^T \widetilde{W}_{12} W_{12} < 0 \tag{8}$$

$$W_{21}^T \widetilde{W}_{21} W_{21} < 0 \tag{9}$$

$$R > 0\,,\ \ S > 0\,,\ \ \lambda_{\min}(RS) \geq 1\,. \tag{10}$$

where

$$\begin{aligned} \widetilde{W}_{12} = {} & \hat{A}R + R\hat{A}^T - \gamma \hat{B}_2 \hat{B}_2^T + \\ & \begin{bmatrix} \hat{C}_1 R \\ \hat{B}_1^T \end{bmatrix}^T \begin{bmatrix} \gamma I & -\hat{D}_{11} \\ -\hat{D}_{11}^T & \gamma I \end{bmatrix}^{-1} \begin{bmatrix} \hat{C}_1 R \\ \hat{B}_1^T \end{bmatrix} \end{aligned} \tag{11}$$

$$\begin{aligned} \widetilde{W}_{21} = {} & \tilde{A}^T S + S\tilde{A} - \gamma \tilde{C}_2^T \tilde{C}_2 + \\ & \begin{bmatrix} \tilde{B}_1^T S \\ \tilde{C}_1 \end{bmatrix}^T \begin{bmatrix} \gamma I & -\tilde{D}_{11}^T \\ -\tilde{D}_{11} & \gamma I \end{bmatrix}^{-1} \begin{bmatrix} \tilde{B}_1^T S \\ \tilde{C}_1 \end{bmatrix} \end{aligned} \quad . \tag{12}$$

Furthermore, the set of γ-sub-optimal controllers of order n_c is non empty if and only if (b) holds for some R and S, which further satisfy the following rank constraint

$$Rank(I - RS) \leq n_c\,. \tag{13}$$

The synthesis procedure is centered around the problem's generalized plant. This plant is used to bring together all the relevant transfers which occur inside the closed loop. The objective consists of finding a stabilizing controller which ensures that all these transfers are bounded in H_∞ norm by unity.

The main approach is similar to the mixed sensitivity problem, in that the generalized plant consists of a set of transfers which have been stacked one on top of each other, with the first four having the following significance, respectively:

- robust stability with respect to uncertainties,
- robust stability with respect to actuator uncertainty,
- steady-state reference tracking and desirable transient response characteristics,
- controller effort limitation.

The last two rows in the generalized plant are, as per Linear Fractional Transformation theory, reserved for expression of the signals which are to be fed back into the controller. In the present case, this refers to the pitch angle tracking error, $\theta_{ref} - \theta$, and the pitch rate, $\dot{\theta}$, to which the last two rows are

dedicated. In the same way, the last column of the generalized plant belongs to the controller output, namely the commanded TVC deflection angle, δ.

3.2 Micro-launcher Numerical Model

The controller has been designed based on the state-space dynamics of the micro-launcher at $t = 1.4sec$, which is given by

$$\left[\begin{array}{ccc|cc} 0.000 & 1.000 & 0.000 & 0.000 & 0.000 \\ 0.081 & 0.000 & -0.002 & 29.570 & -0.081 \\ 33.800 & 0.000 & -0.706 & -33.670 & -24.00 \\ \hline 1.000 & 0.000 & 0.000 & 0.000 & 0.000 \\ 0.000 & 1.000 & 0.000 & 0.000 & 0.000 \\ 0.000 & 0.000 & 1.000 & 0.000 & 0.000 \\ 1.000 & 0.000 & -0.029 & 0.000 & 1.000 \end{array}\right], \tag{14}$$

where the last line of the transfer matrix above brings α - the angle of attack - to the output of the system.

The controller synthesized for this model runs properly towards the first flight segment, until $t = 17\,\text{sec}$.

3.3 Micro-launcher Application

The closed loop system represents a LFT between the generalized plant, G, and the controller, K, and can be easily visualized in Fig. 2. The generalized plant interconnection is depicted in Fig. 3.

The H_∞ optimization problem minimizes the transfer from the input vector, $\mathbf{w}$, to the output vector, $\mathbf{z}$, where

$$\mathbf{w} = [w_1 \;\; w_2 \;\; \alpha_w \;\; r]^T \,, \tag{15}$$

$$\mathbf{z} = \left[z_1 \;\; z_2 \;\; e_W \;\; \delta_W \;\; e \;\; \dot{\theta}\right]^T \,. \tag{16}$$

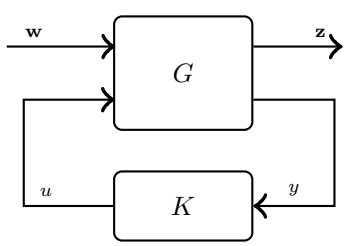

Fig. 2. Lower Linear Fractional Transformation

The preliminary generalized plant, which does not include tracking or command weights, is

$$G = \left[\begin{array}{cccc|c} 0 & W_{unc}^{\delta} \cdot G_{nom}^{TVC} & 0 & 0 & W_{unc}^{\delta} \cdot G_{nom}^{TVC} \\ 0 & 0 & 0 & 0 & W_{unc}^{TVC} \\ -P_{nom}^{11} & P_{nom}^{11} \cdot G_{nom}^{TVC} & -P_{nom}^{12} & 1 & -P_{nom}^{11} \cdot G_{nom}^{TVC} \\ 0 & 0 & 0 & 0 & 1 \\ \hline -P_{nom}^{11} & P_{nom}^{11} \cdot G_{nom}^{TVC} & -P_{nom}^{12} & 1 & -P_{nom}^{11} \cdot G_{nom}^{TVC} \\ P_{nom}^{21} & P_{nom}^{21} \cdot G_{nom}^{TVC} & P_{nom}^{22} & 0 & P_{nom}^{21} \cdot G_{nom}^{TVC} \end{array}\right], \tag{17}$$

where the abbreviated transfers signify:

- P_{nom}^{ij} is the transfer function on the ith row and j^{th} column of the micro-launcher's nominal transfer matrix $P_k(s)$, $\forall\, k \in \overline{1:N}$,
- G_{nom}^{TVC} is the TVC actuator's nominal transfer function,
- W_{unc}^{δ} is the uncertainty weight of the micro-launcher's TVC input,
- W_{unc}^{TVC} is the uncertainty weight belonging to the TVC actuator model.

It is worthwhile to remark upon the fact that the genera–lized plant's expression is invariant with regards to the linearization index, k, which indicates that the design objectives are successfully decoupled from the plant characteristics. Furthermore, the uncertainty weight for the micro-launcher's wind incidence input has not turned up anywhere within the expression of the generalized plant nor does it indeed have any bearing upon the robust stability of the closed-loop system. This is due to the fact that the uncertainty weights of the two inputs have been deduced independently of one another by taking advantage of the linear nature of the considered model. Thus, the wind incidence uncertainty weight is in no way involved in the cycle of closed-loop transfers, serving merely to modulate the frequency response of the exogenous wind incidence signal. In this way, the weight pertains more rather to the problem of rejecting the wind disturbance, while the wind incidence channel requires only nominal stabilization, from the perspective of ensuring closed-loop robust stability.

The final generalized plant is obtained by multiplying rows 3 and 4 from the plant above with, respectively, the tracking weight W_e and the command weight W_{cmd}, where

$$W_e = \frac{1}{s + 0.001} \;\text{ and }\; W_{cmd} = \frac{100s}{(s+50)(s+500)} \,.$$

The tracking weight takes the form of a high gain low-pass filter in order to promote high amplitudes in open-loop singular values at low frequencies, which guarantees reference tracking to within measuring precision error. The command weight has been designed as a band-pass filter whose bandwidth marks out the spectrum in which the frequency response of the transfer from reference to command signal shows significant gain. This is done in order to limit controller effort on reference tracking, yet care must be paid to avoid doing so in a too abrupt manner. Aside from the fact that needlessly harsh penalties imposed upon the command signal's strength may render tracking infeasible through insufficient control, the model's unstable nature guarantees significant waterbed phenomena in the sensitivity function's singular values wherever the latter are too acutely penalized in the frequency domain.

All said and done, the final generalized plant may be submitted for synthesis by employing a dedicated numerical procedure for singular H_∞ stabilization. The reason why the problem cannot be tackled by way of the classical dual Riccati equation approach is the fact that the row expressing the pitch rate feedback transfer has a rank-deficient feed-through state matrix. Nevertheless, adequate LMI solvers are readily available for the singular approach, which yield an H_∞ cost of $\gamma = 0.5$ along with a 13th order controller. The obtained controller is validated on the first linear model after lift-off, and the step response shown in Fig. 4 indicate:

- robust closed-loop stability,
- adequate steady-state reference tracking,
- suitable transient response characteristics in pitch angle output channel,
- appropriate command amplitude bounding without significant waterbed effects,
- tight attack angle amplitude bounding in spite of rapid changes in the reference signal.

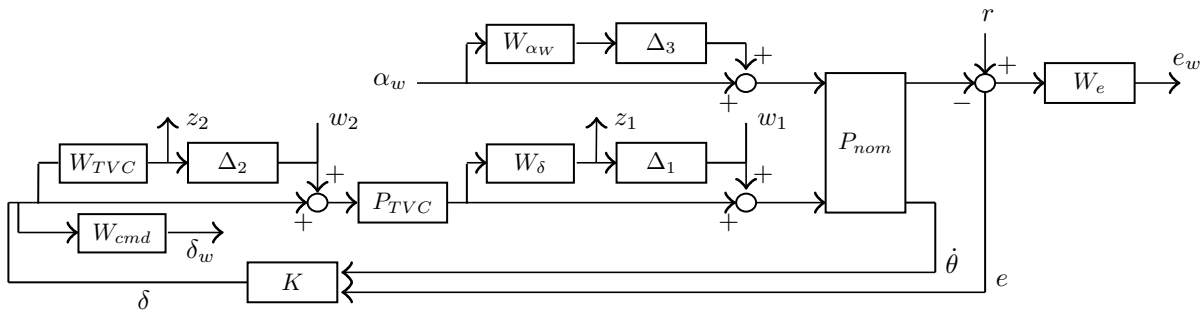

Fig. 3. The Generalized Plant Interconnection

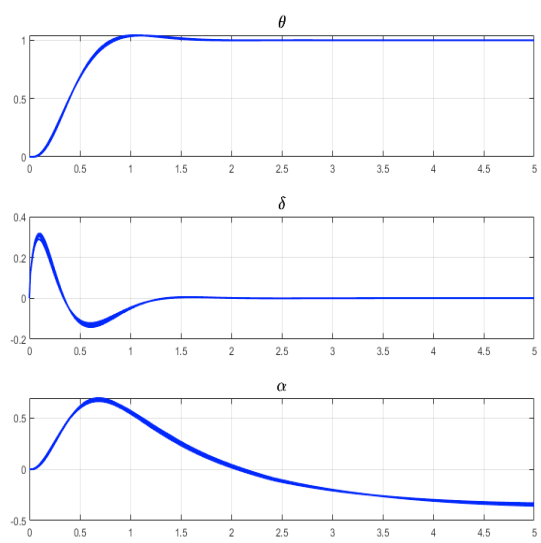

Fig. 4. Linear simulations results

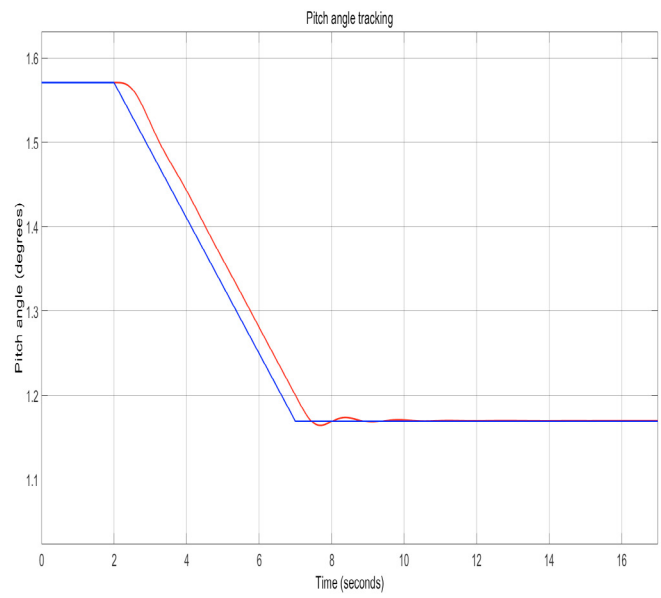

Fig. 5. Pitch angle tracking for the first flight segment (17 sec)

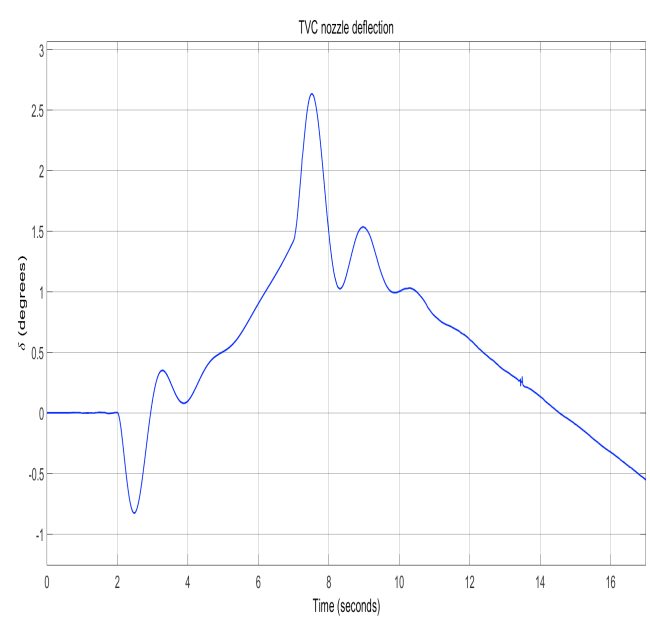

Fig. 6. TVC command for the first flight segment (17 sec)

As expected, all design objectives have been met by the obtained controller in linear simulation.

Once this is done, the controller is tested in the non-linear simulator for a duration of 40 seconds. This time interval approximately corresponds to the atmospheric part of the flight trajectory. Reference tracking simulation results can be seen in Fig. 5.

This shows that not only is stability maintained throughout the entire atmospheric part of the launcher's trajectory using a single controller, the same object also provides the sought after transient response characteristics to go along with pitch angle reference tracking. Controller effort is also checked for the 40 seconds interval with the results being displayed in Fig. 6.

Upon closer inspection, the control signal amplitude is bounded to around $\pm 2.6\,\mathrm{deg}$, well within the limit of $\pm 7\,\mathrm{deg}$. The significant gap between the widths of these two intervals is intentional, as it allows for a TVC actuation budgeting scheme as follows:

- $\pm 3\,\mathrm{deg}$ for pitch angle reference tracking,
- $\pm 2\,\mathrm{deg}$ for wind incidence rejection,
- $\pm 2\,\mathrm{deg}$ in reserve for unexpected events or maneuvers.

4. CONCLUSION

The preliminary results which have been presented are encouraging. They seem to show that through careful modeling of

the micro-launcher's dynamics and by exploiting all available particularities of the synthesis approach, the need for a gain-scheduling system may be minimized, or altogether bypassed by safely switching controllers during the coasting phases.

ACKNOWLEDGEMENTS

The authors thank to Cristian Oară, for his insights into robust theory, to Teodor Chelaru, for the launcher dynamics, and to Costin Ene, for his help with the non-linear flight dynamics simulator.

Moreover, the authors acknowledge the valuable expertise on space launcher control systems provided by Samir Bennani.

REFERENCES

Apkarian, P. and Noll, D. (2006). Nonsmooth H-infinity Synthesis. *IEEE Transactions on Automatic Control*, Vol. 51, No. 1, pp. 71-86.

Apkarian, P. and Tuan, H.D. (2000). Parametrized LMIs in Control Theory. *SIAM Journal on Control and Optimization*, Vol. 38, No. 4, pp. 1241-1264.

Bruisma, N. and Steinbuch, M. (1990). A Fast Algorithm to Compute the H_∞-Norm of a Transfer Function Matrix. *Systems & Control Letters*, Vol. 14, pp. 287-293.

Chilali, M., Gahinet, P., and Apkarian, P. (1999). Robust Pole Placement in LMI Regions. *IEEE Transactions on Automatic Control*, Vol. 44, No. 12, pp. 2257-2270.

Doyle, J., Glover, K., Khargonekar, P., and Francis, B. (1989). State-space solutions to standard H_2 and H_∞ control problems. *IEEE Transactions on Automatic Control*, Vol. 34, No. 8, pp. 831-847.

Doyle, J., Packard, A., and Zhou, K. (1991). Review of LFTs, LMIs, and μ. *Conference on Decision and Control*, pp. 1227-1232.

Gahinet, P. (1992). Reliable Computation of H_∞ Central Controllers near the Optimum. *American Control Conference*, pp. 738-742.

Gahinet, P. (1994). On the Game Riccati Equations Arising in H_∞ Control Problems,. *SIAM Journal on Control and Optimization*, Vol. 32, pp. 635-647.

Gahinet, P. and Apkarian, P. (1994). A linear matrix inequality approach to H_∞-control. *International Journal of Robust and Nonlinear Control*, Vol. 4, No. 4, pp. 421448.

Glover, K. and J.C.Doyle (1988). State-space formulae for all stabilizing controllers that satisfy an H_∞ norm bound and relations to risk sensitivity. *Systems & Control Letters*, Vol. 11, No. 8, pp. 167-172.

Greensite, A.L. (1970). *Analysis and Design of Space Vehicle Flight Control Systems*. Spartan Books.

Iwasaki, T. and Skelton, R. (1994). All controllers for the general H_∞-control problem: LMI existence conditions and state space formulas. *Automatica*, Vol. 30, No. 8, pp. 1307-1317.

Noll, D., Torki, M., and Apkarian, P. (2004). Partially Augmented Lagrangian Method for Matrix Inequality Constraints. *SIAM Journal on Optimization*, Vol. 15, No. 1, pp. 161-184.

Packard, A., Zhou, K., Pandey, P., Leonhardson, J., and Balas, G. (1992). Optimal, constant I/O similarity scaling for full-information and state-feedback problems. *Systems & Control Letters*, Vol. 19, No. 4, pp. 271-280.

Safonov, M., Limbeer, D., and Chiang, R. (1989). Simplifying the H_∞ Theory via Loop Shifting, Matrix Pencil and Descriptor Concepts. *International Journal of Control*, Vol. 50, No. 6, pp. 2467-2488.

Stoorvogel, A. (1991). The Singular H_∞ Control Problem with Dynamic Measurement Feedback. *SIAM Journal on Control and Optimization*, Vol. 29, pp. 160-184.

Stoorvogel, A., Saberi, A., and B.Chen (1991). A Reducer-order Observer-based Controller Design for H_∞ Optimization. *AIAA Guidance, Navigation and Control Conference*, pp. 716-722.

Tuan, H.D., Apkarian, P., and Nguyen, T. (2001a). Robust and reduced-order filtering: new LMI-based characterizations and methods. *IEEE Transactions on Signal Processing*, Vol. 40, No. 12, pp. 2975-2984.

Tuan, H.D., Ono, E., Apkarian, P., and Hosoe, S. (2001b). Nonlinear H-infinity Control for an Integrated Suspension System via Parameterized Linear Matrix Inequality Characterizations. *IEEE Journal on Control Systems Technology*, Vol. 9, No. 1, pp. 175-185.

Zhou, K. and Khargonekar, P. (1988). An algebraic Riccati equation approach to H_∞ optimization. *Systems and Control Letters*, Vol. 11, pp. 85-92.